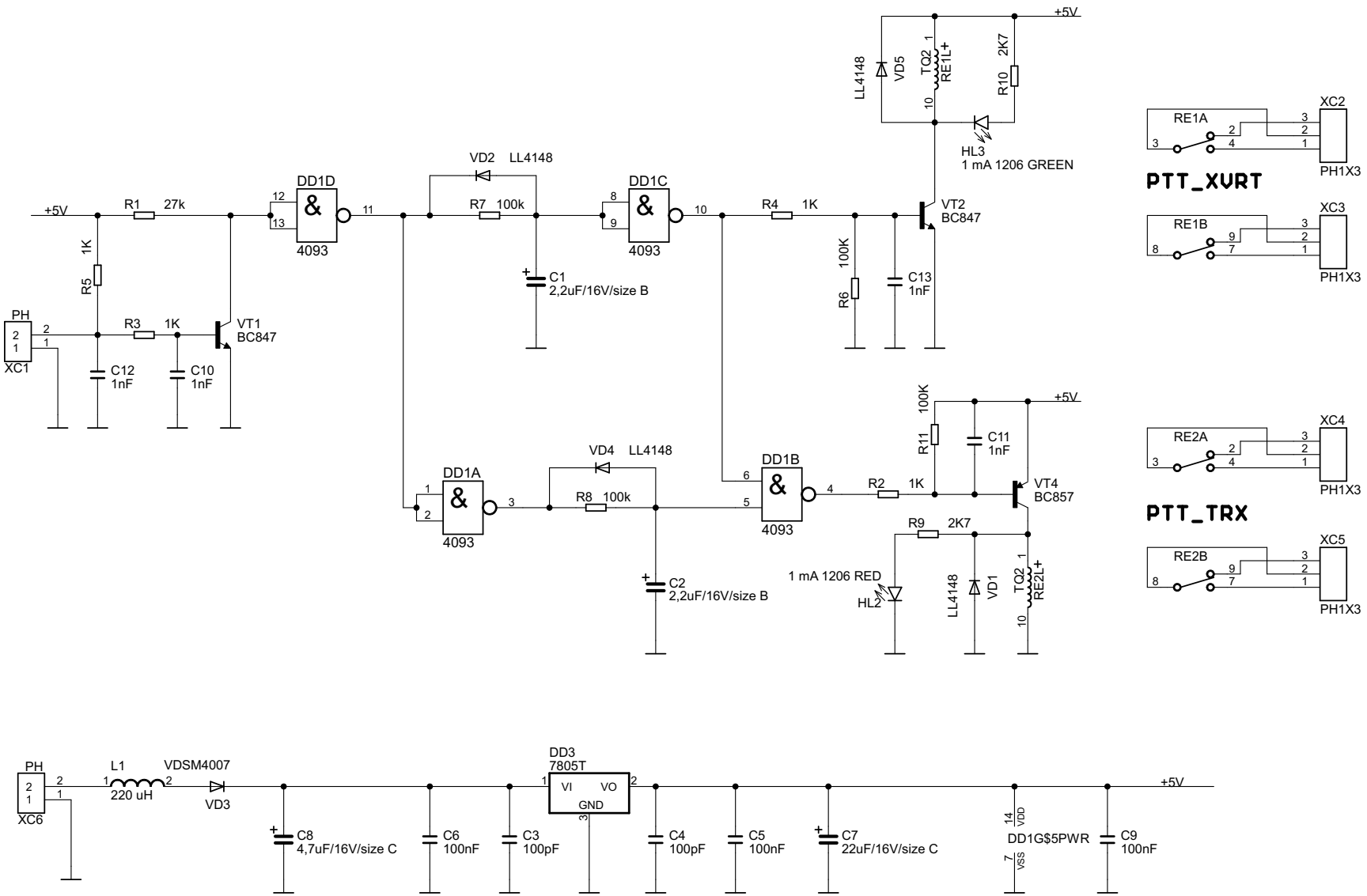

IDEA FROM OK1VPZ SEQUENCER

http://www.ok2kkw.com/00003016/sequencer/sequencer.htm

SEQUENCER BY OK1CJH 2010