TinyTrack PCB by OK1CJH v02A
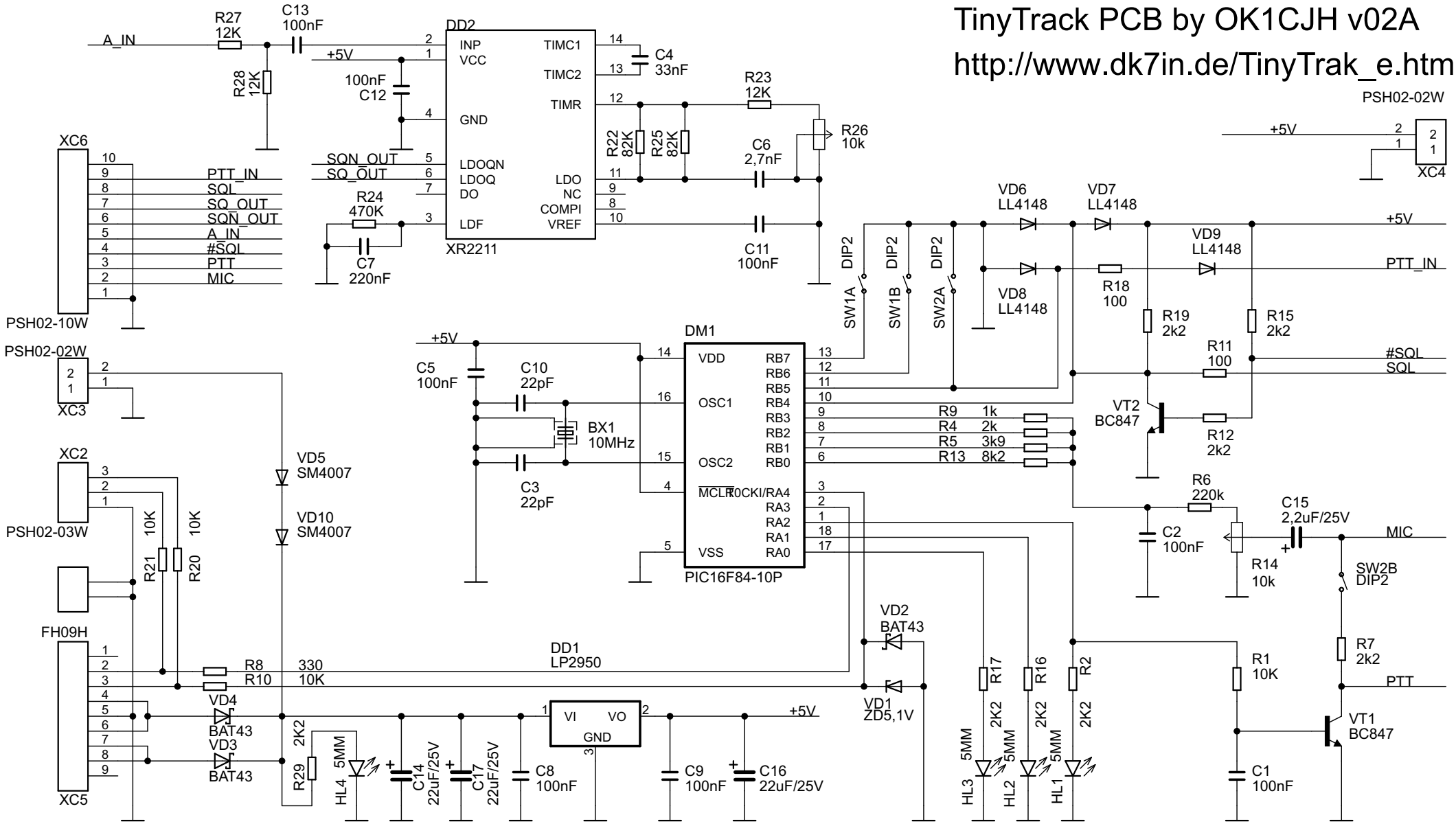
http://www.dk7in.de/TinyTrak_e.html